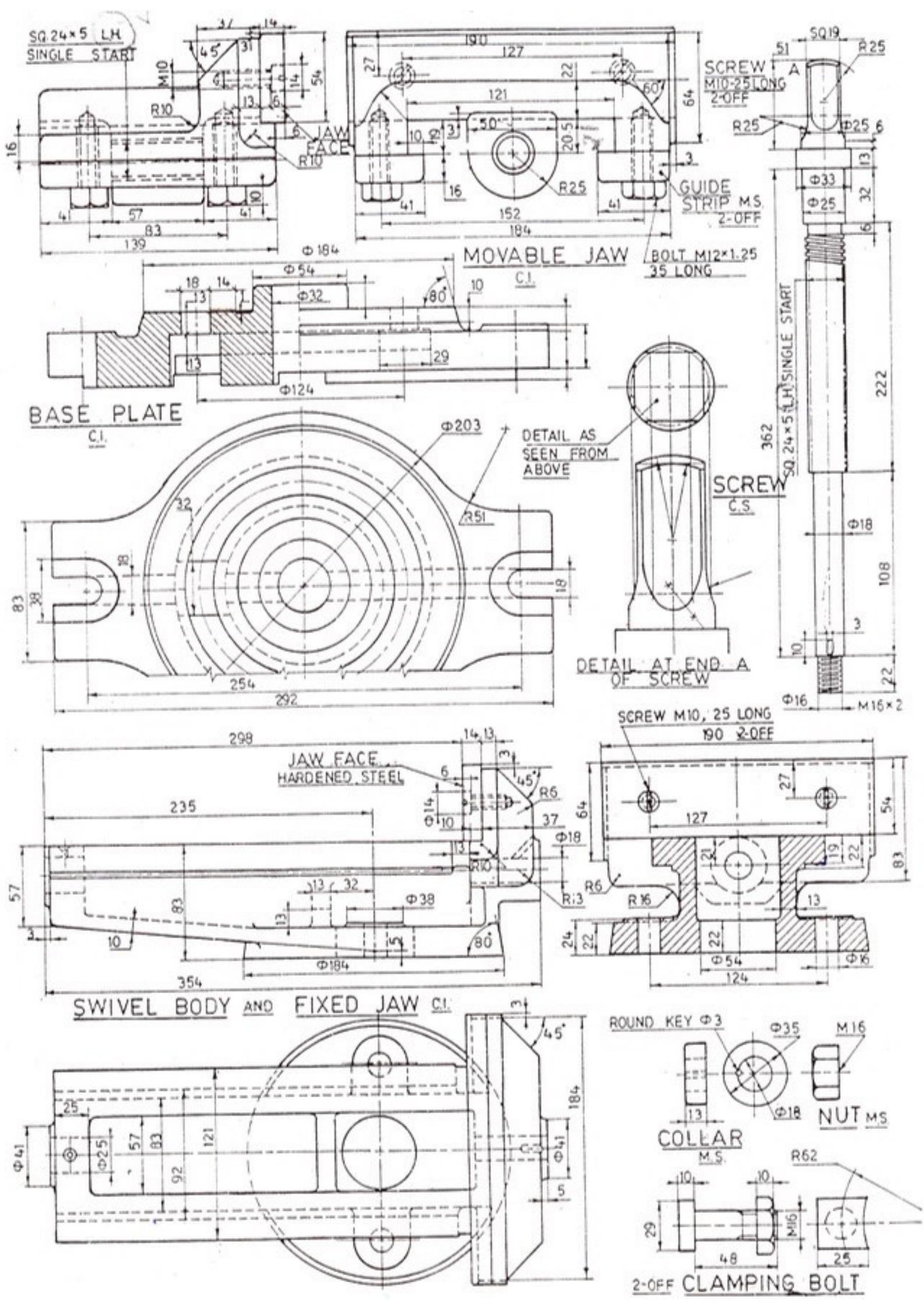
SQ.24×5 LH
SINGLE START
JAW FACE
R10
MOVABLE JAW
C.I.
GUIDE STRIP M.S.
2-OFF
BOLT M12×1.25
35 LONG
SCREW
M10-25 LONG
2-OFF
SQ19
R25
Φ25
Φ33
Φ184
Φ54
Φ32
Φ124
BASE PLATE
C.I.
Φ203
R51
DETAIL AS SEEN FROM ABOVE
SCREW
C.S.
DETAIL AT END A OF SCREW
Φ18
Φ16
M16×2
SCREW M10, 25 LONG
190 2-OFF
JAW FACE
HARDENED STEEL
R6
R13
R16
Φ38
SWIVEL BODY AND FIXED JAW C.I.
ROUND KEY Φ3
Φ35
M16
COLLAR
M.S.
NUT MS
R62
2-OFF CLAMPING BOLT

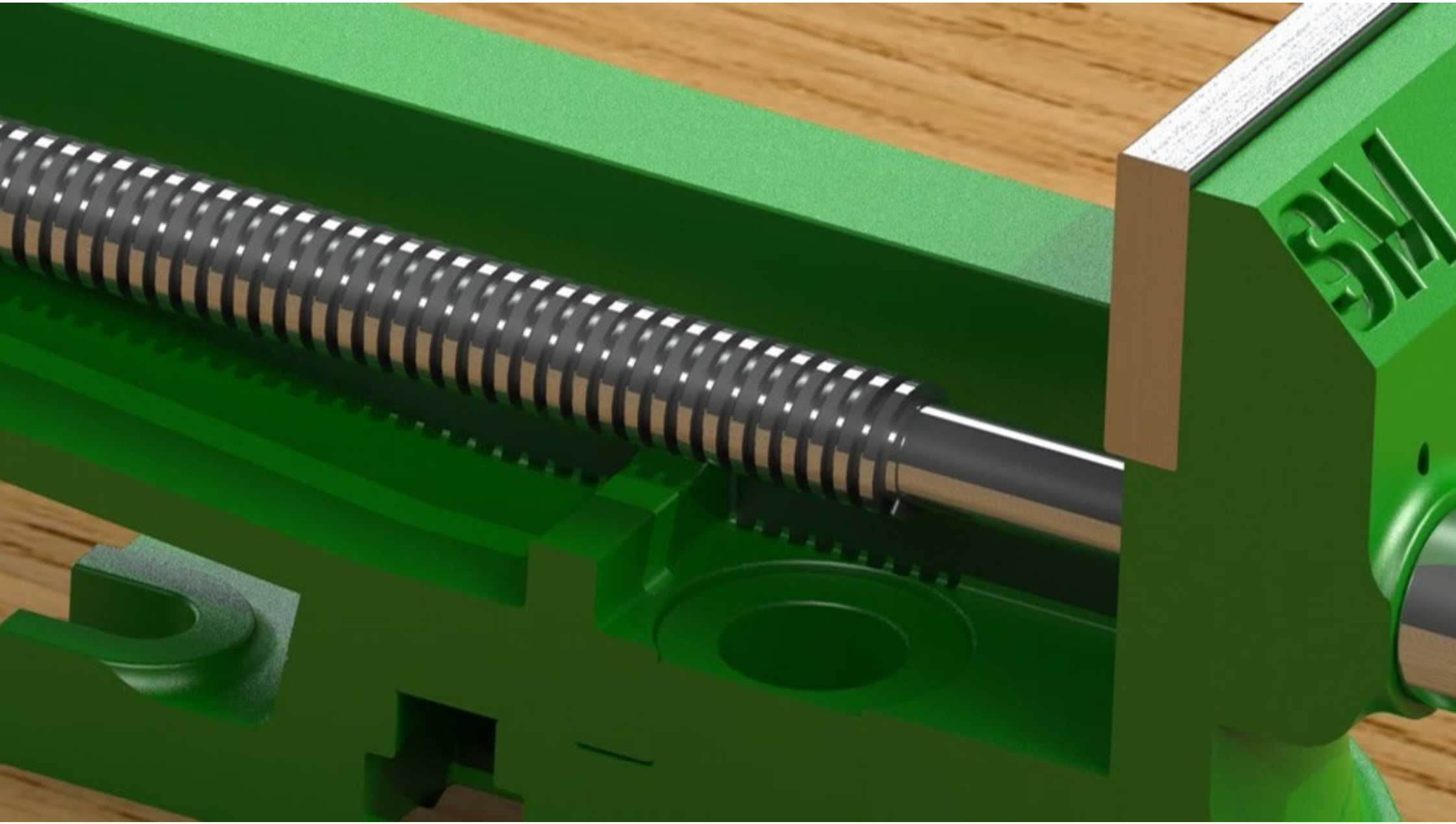
5M

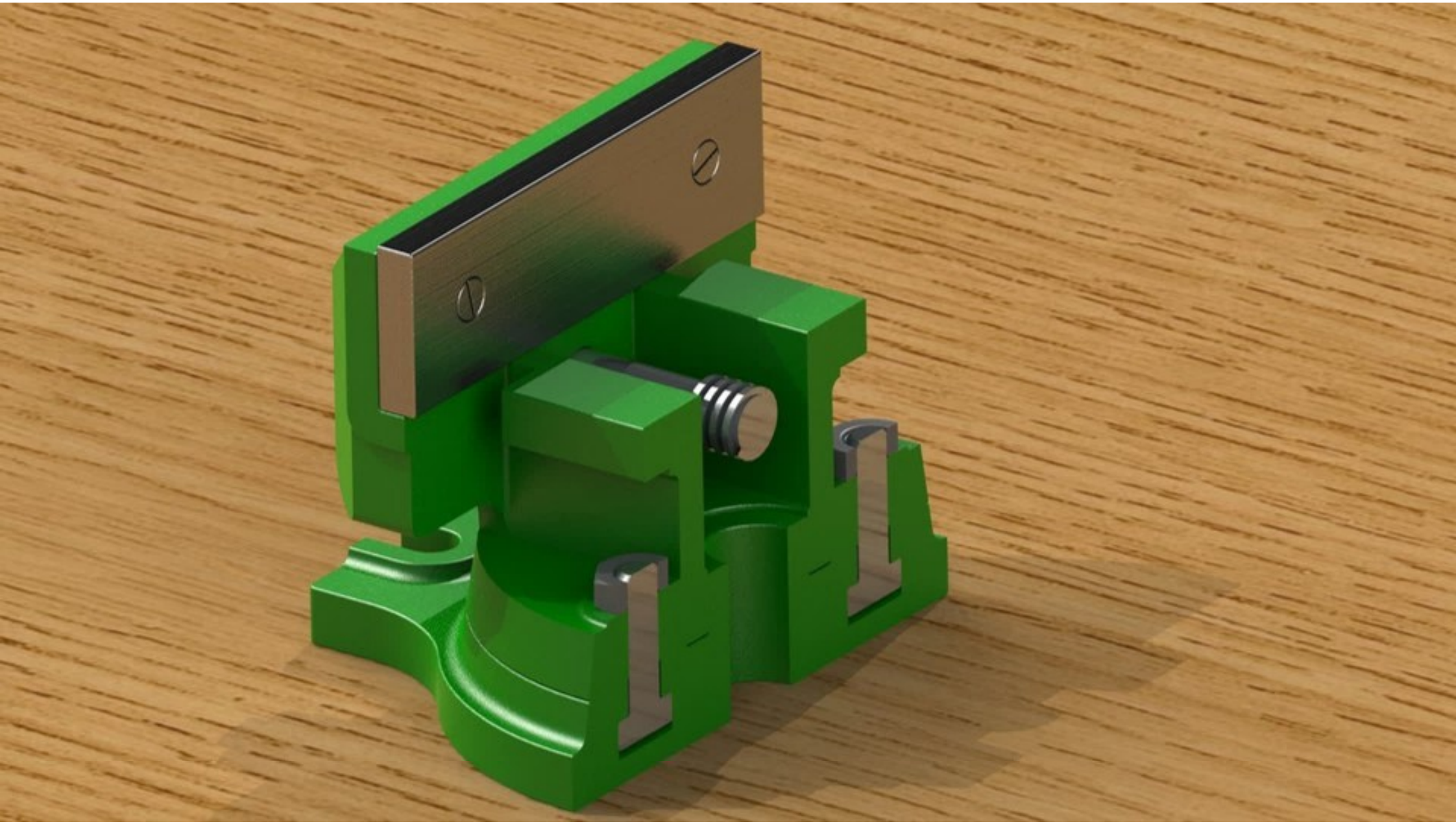

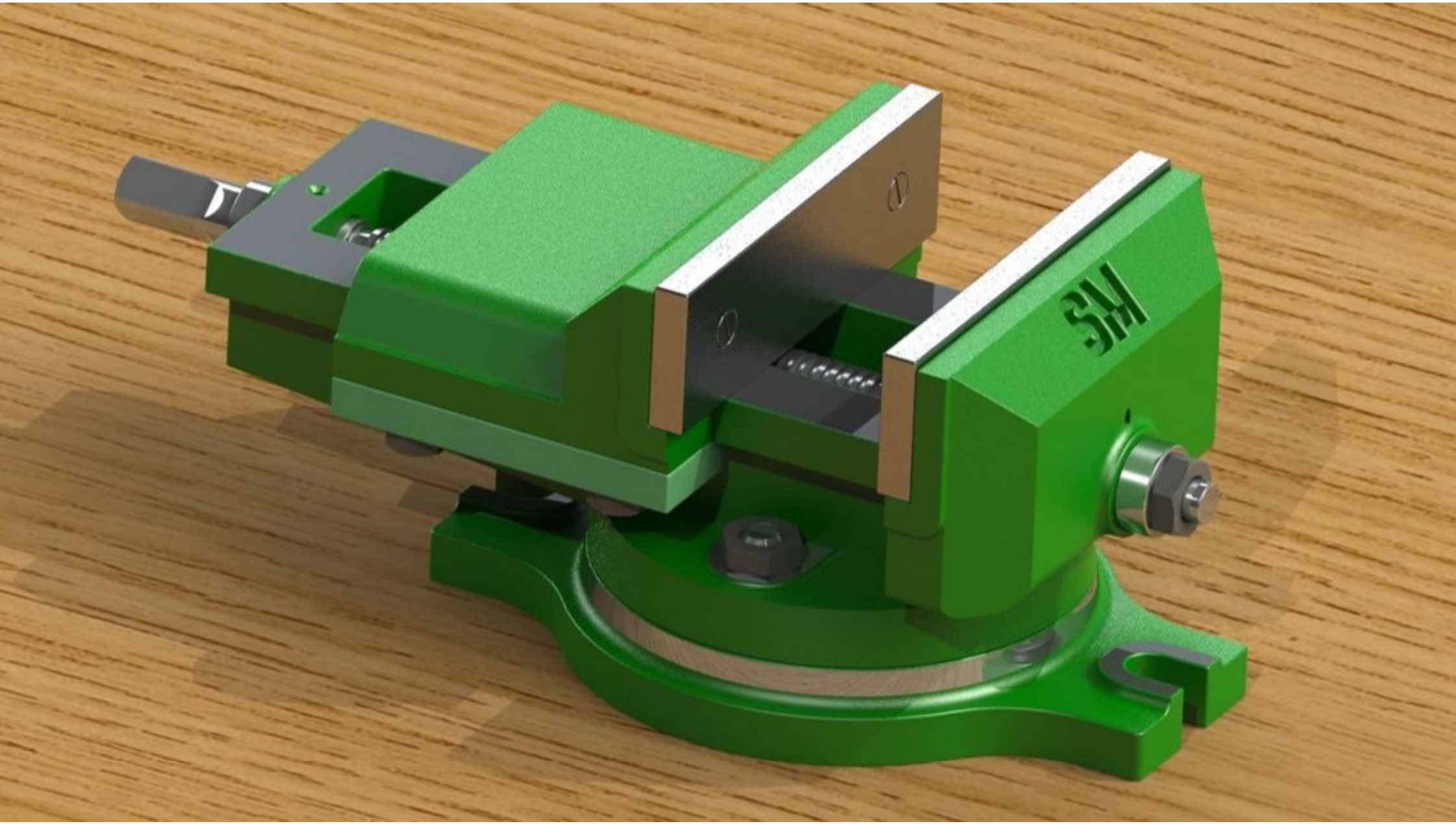
SM