Apogee Components

PEAK OF FLIGHT

NEWSLETTER

In This Issue

Where Did Model Rocketry Really Start?

Cover Photo: Sunward Aerospace's Mini CFX-3 kit. Get one at:
www.ApogeeRockets.com/Rocket_Kits/Skill_Level_2_Kits/Mini_CFX-3

Apogee Components, Inc. — Your Source For Rocket Supplies That Will Take You To The "Peak-of-Flight"
3355 Fillmore Ridge Heights
Colorado Springs, Colorado 80907-9024 USA
www.ApogeeRockets.com e-mail: orders@apogeerockets.com
Phone: 719-535-9335 Fax: 719-534-9050

ISSUE 314 JUNE 5, 2012

Where Did Model Rocketry Really Start?

By William Colburn

If you have been in model, high power, or experimental rocketry from some time, names like G. Harry Stine, Orville Carlisle and Vern Estes are very familiar to you. But what came before? Where was even the first mention of *"model rocketry"?*

In the earliest days of rocket propulsion experimentation, there were no well-known rockets to model! So clearly the first "model rockets" would have come after the V-2 most likely, and after WWII.

Following the Great War, WWII, and the bombardment of England with the huge V-2 rocket, rockets had become very popular with the "eggheads", intellectuals and inventors of the time. Rocket clubs and societies flourished, possibly over 1000 at the peak of interest in the mid 1950's.

The U.S. Army encouraged this interest with professional support at launches, the first at Camp AP Hill which I attended in 1957. Captain Brinley's book on Amateur Rocketry has become a collector's classic.

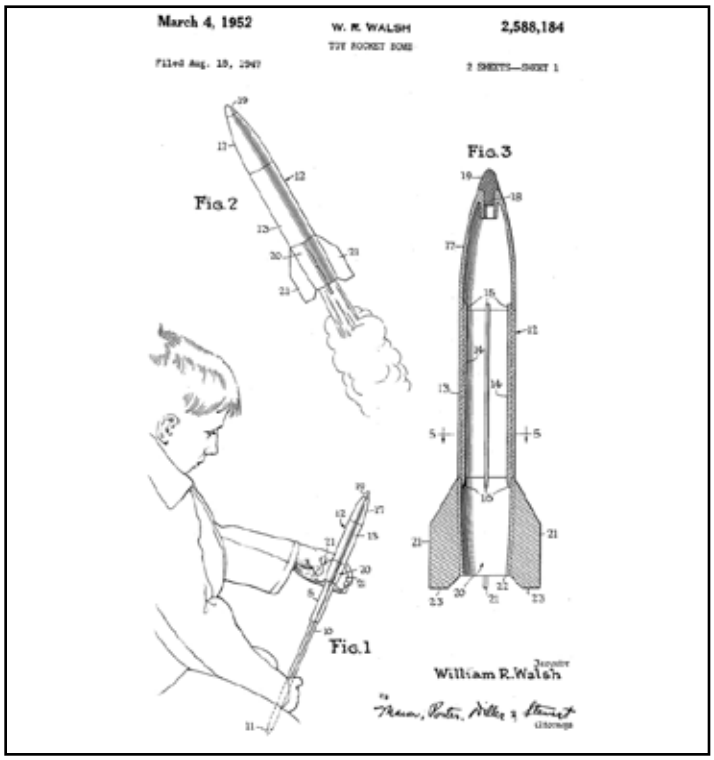

Figure 1: Patent 2,588,184 by inventor W.R. Walsh for a CO2 powered model rocket.

Because of this profound interest, much experimentation took place, often unsupervised and foolishly conceived. My father-in-law, Howard Seifert, then President of the American Rocket Society, acknowledged both the dangers of unsupervised experimentation and the need for growing a new generation of rocket scientists and engineers. This article was called "Ardent Youth," being a sardonic play on words as "ardent" can be both "enthusiastic" or "flaming"!

G. Harry Stine taking somewhat advantage of the notoriety of the few disastrous experiments, announced the introduction of a safe rocket motor that could be used with impunity in "model rockets".

Many think that Vern Estes, the founder of Estes Industries, was the originator of the model rocket. In fact, it was George James who advertised his *Model Rocket Pamphlet* in Popular Science in 1951. Although, another contender would be the originator of the following patent for similar toy rockets modeled after the V-2 but using CO2 cartridges for propulsion as shown in Figure 1.

This is a rocket seen in Popular Science and Mechanics in the late 1940's through the 50's powered by a punctured CO2 cartridge.

Orville Carlisle

Orville Carlisle, a shoe salesman and pyrotechnist from Nebraska, bought the booklet from George and it may or may not be what suggested his endeavor to mass produce them. Orville was the one who came up with the idea of a mass produced single use rocket engine used in a re-usable model rocket.

G. Harry Stine and Orville started the first model rocket company in a basement. This company was called Model Missiles.

When the demand exceeded Orville's production rate, Orville asked Vern Estes' Mile High Fireworks Co. if they were interested in making them en masse. Vern Estes liked the idea and came up with a design for a machine to do just

Continued on page 3

About this Newsletter

You can subscribe to receive this e-zine FREE at the Apogee Components web site (www.ApogeeRockets.com), or by sending an e-mail to: ezine@apogeeRockets.com with "SUBSCRIBE" as the subject line of the message.

Newsletter Staff

Writer: Tim Van Milligan
Layout / Cover Artist: Tim Van Milligan
Proofreader: Michelle Mason

Continued from page 2

Where Did Model Rocketry Really Start?

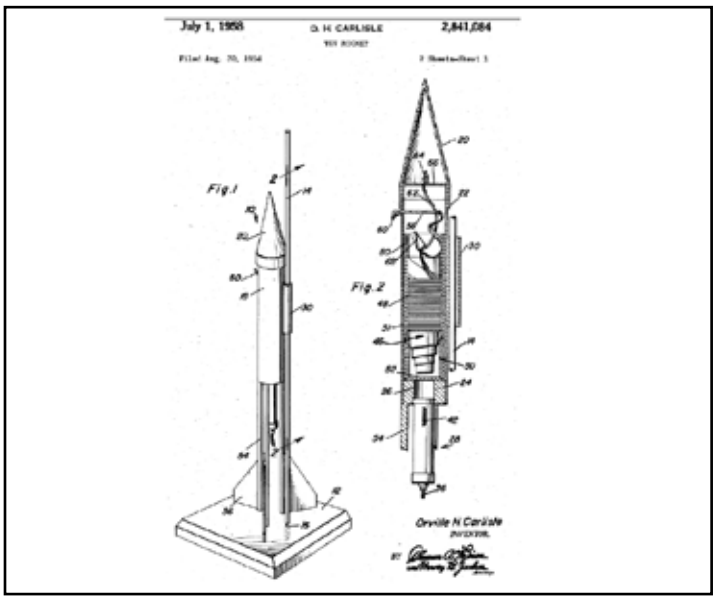

Figure 2: Patent 2,841,084 by inventor Orville H. Carlisle on what would become a "Model Rocket."

that: the famous "Mable" automatic rocket motor fabricator. It could produce the little motors at a higher production rate than hand ramming. As a side effect, the performance was more consistent.

In 1958, Estes industries was formed. Two years later, the first Estes model rocket kits and rocket engines were being offered by mail order and shipped from coast to coast. Estes Industries had a great deal of influence on the coming generation of rocketeers, both professional and amateur, from astronauts to propulsion engineers and from science-fair entrants to university instructors.

The formation of the National Association of Rocketry then became the legislative organization which finally made the hobby legal and restricted to commercially manufactured and safety tested motors.

Brief Overview of Rocketry

This then is a brief overview of the development of the hobby of model rocketry.

Amateur Rocketry, so prevalent in the 1950's, congealed with the advent of commercially made motors to a few groups like the NAR and Triopoii. There are still a few in existence, notably the Reaction Research Society, being the oldest continuously used amateur rocket range and test site, and the Rocket Research Institute, with their Rocket Ranch also in California.

More History Of Model Rockety

The NAR magazines contain a wealth of information on the origins of model rocketry. For example, the September 1988 issue of *American Space Modeling* contains a wonderful history of Orville H. Carlisle (NAR #1), written By G. Harry Stine (NAR #2).

Tom Beach wrote a three-part article about Vern Estes' early model rocketry history in *Sport Rocketry* magazine (Jan/Feb 2007, Mar/Apr 2007, and May/Jun 2007).

Continued on page 4

Continued from page 3

Where Did Model Rocketry Really Start?

For more history of the early model rocket pioneers, download the magazine index from the NAR at: http://www.nar.org/pdf/magindex.pdf.

For a listing of patents for inventions pertaining to model rocketry, see *Model Rocet Design and Construction* at: www.ApogeeRockets.com/ /Rocket_Books_Videos/Books/Model_Rocket_Design_And_Construction

About the Author

William Colburn has been a rocket experimenter since 1947. Here are a few of his accomplishments since then:

• Introduced sugar propellant to the amateur rocket community.

• Founded the Rocket Motor Research Society in Watsonville, California in 1949.

• Designed, built and launched some 1200 "heavy metal" rockets by 1965.

• Monitored the Russian Military and Space programs for NSA.

• Worked at Thiokol Chemical Corporation, and was a member of the Advanced Design Group in Huntsville.

• Staff Engineer at Space Ordnance Systems.

• Founder of Aerocon, Experimental Scientist Supply Company.

• Hybrid Propulsion Consultant and author of the *"Hybrid Design Manual."*

• At heart, William Colburn still considers himself an amateur rocketeer and avid "Kitchen Chemist."

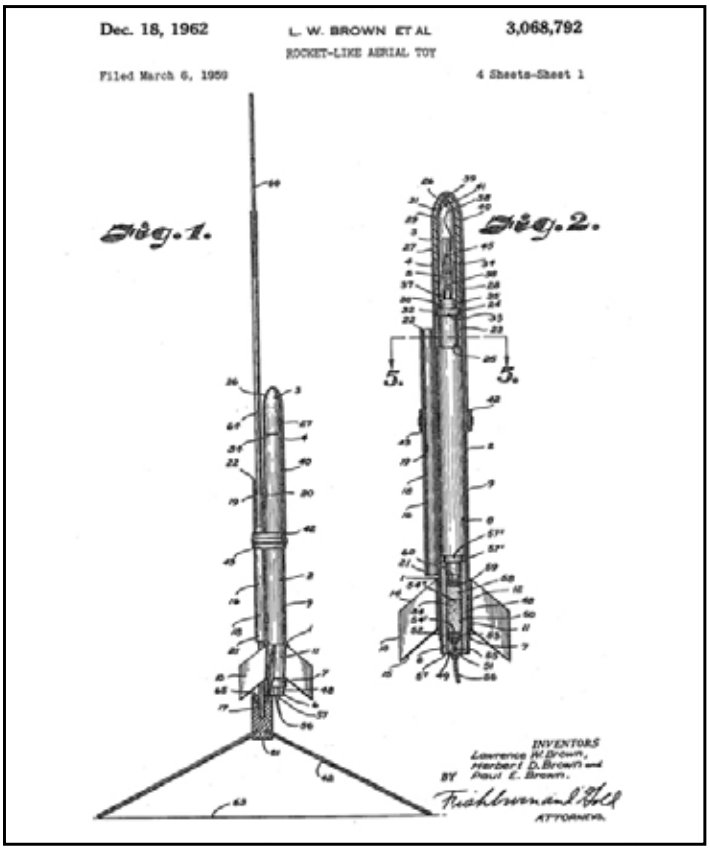

Figure 3: Fresh on the heels of the appearance of Estes Model Rockets, here is another early patent.